DWE4151 SMALL ANGLE GRINDER 1

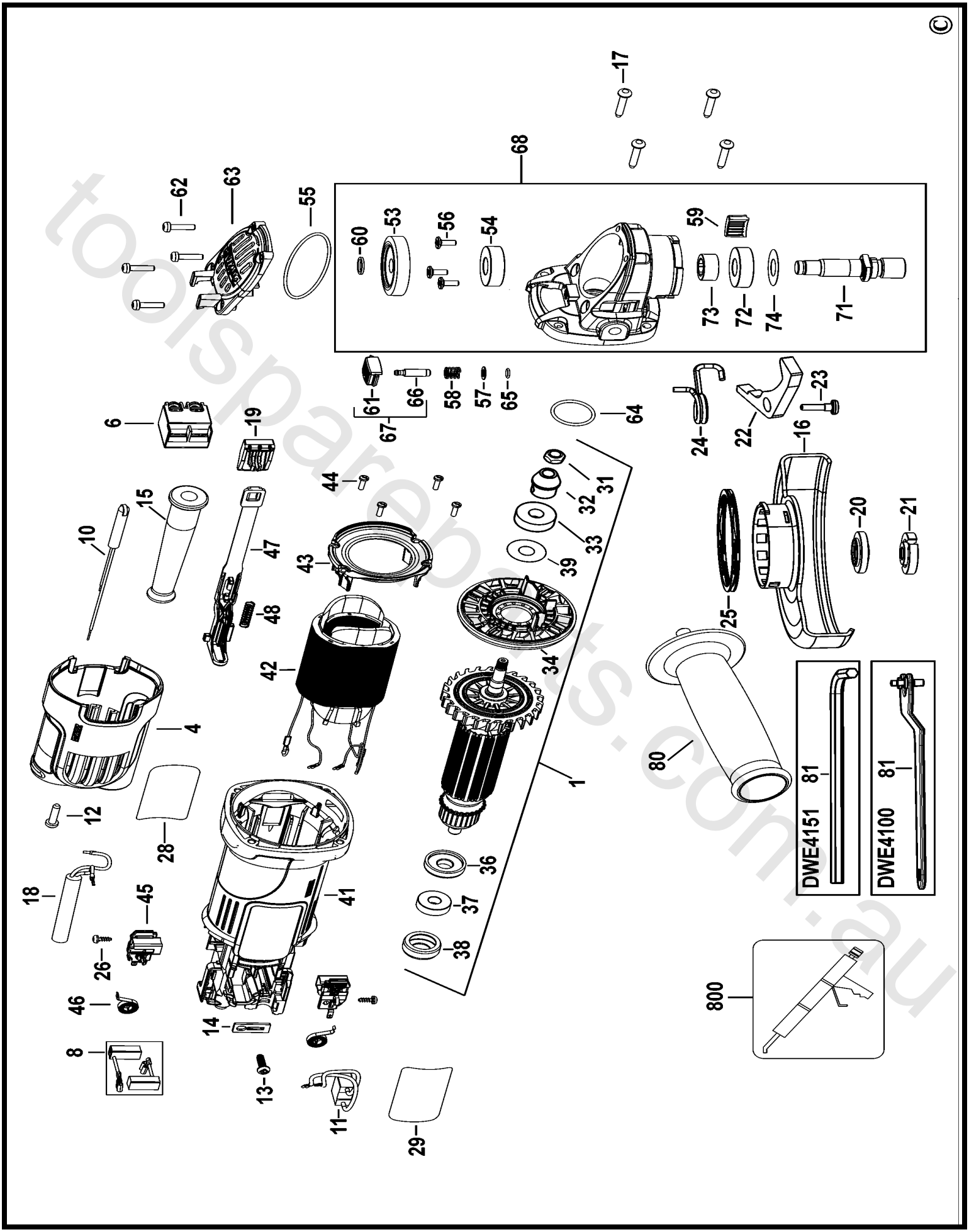

toolspareparts.com.au